Parallel fitting mount for PC board

WFB series (10 pcs/pack)

- Possible to put additional small PCB in parallel on the main PCB by fixing WFB-1 series with M3 screw.
- Possible to fix the additional PCB with M2 screw (Refer 2M, 2.6M, 3M, 4M series in case of using plastic screw.)
- Possible to make 2-tiered, 3-tiered PCB by fitting WFB-0 series on WFB-1 series with adhesive.
- Material : PPS Black (UL94V-0)
- Applicable PCB thickness: t1.6、t1.0、t0.6
- Screw to fix WFB series: M3 P=0.5 screw
- Screw to fix the additional PCB: M2 P=0.4 screw

■ Part No.

Part No.	A	Adaptive PC board thickness
WFB-1-1.6	1.75	1.6
WFB-1-1.0	1.15	1.0
WFB-1-0.6	0.75	0.6

- For stacking (more than 2-tiered)

Part No.	A	Adaptive PC board thickness
WFB-0-1.6	1.75	1.6
WFB-0-1.0	1.15	1.0
WFB-0-0.6	0.75	0.6

■ Example of usage

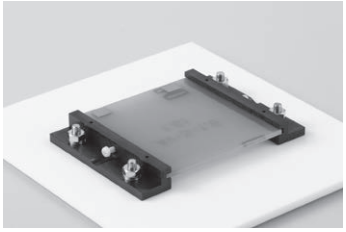

WFB-1- □

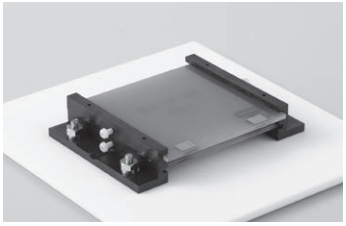

Bonding WFB-1- □ and WFB-0- □
(2-tiered)

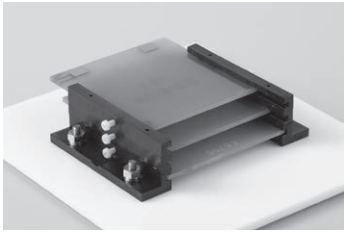

Bonding WFB-1- □ and WFB-0- □
(3-tiered)

■ Dimension

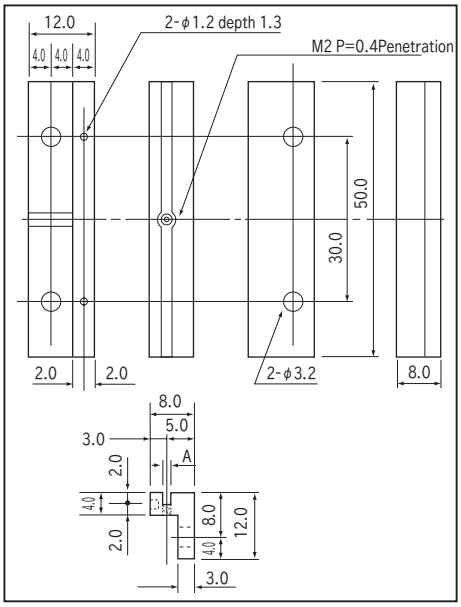

WFB-1- □

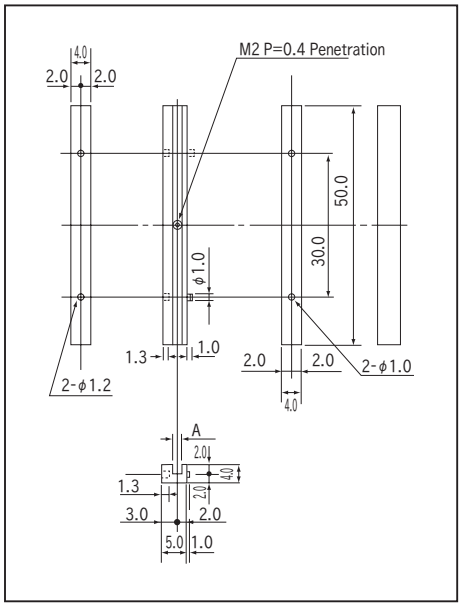

WFB-0- □

■ Reference drawing of the fitting position

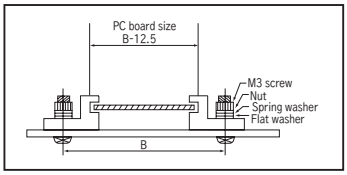

(1-tiered)

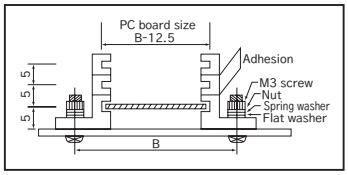

(3-tiered)

■ Instructions for use

- Please do the screwing at the point that M2 screw contact to the PCB.
(Please fix the screw by the screw-lock etc)